ISSN 2395-1621

Modification of Root Fillet Profile for Optimum Gear Life

#1A.A. Sayyad,#2Prof. K. H. Munde

#1G. S. Moze College of Engineering, Balewadi, Pune, India.
#2Dr. D. Y. Patil School of Engineering, Pune, India

ABSTRACT

Gears are used for transmitting power. They develop high stress concentration at the root. The repeated stressing on the fillets causes the fatigue failure of gear tooth. The main objective of this study is to modify the root shape to reduce stress concentration. While generating the working profile (involute) of gear using rack cutter, the trochoidal root fillet curve is generated. The root fillet obtained thus is not necessarily an optimum profile for the bending stress. In general, gear which number of teeth less than 17, could be the problem of undercutting during gear manufacturing process which minimizes the strength of gear at root. In this study, circular root fillet instead of the trochoidal root fillet is introduced in gear and FEA by using ABAQUS software. The circular root fillet profile is constructed by drawing an arc tangent to working profiles and root circle and this arc is taken as reference root fillet to generate alternative root fillet profile . The strength of these msodified teeth is studied in comparison with the standard design. The analysis demonstrates that the circular root having higher bending strength over the standard trochoidal root fillet gear. The result reveals that the circular root fillet design is particularly suitable for lesser number of teeth in pinion and whereas the trochoidal root fillet gear is more optimum for higher number of teeth. The improved root fillet profiles resulted into reduction of Max principle stress by 10 to 20 percentage.

Keywords—trochoidal root fillet curve, gear, circular root fillet, Bending Stress & optimization.

ARTICLE INFO

Article History

Received :18th November 2015

Received in revised form :

19th November 2015

Accepted : 21st November , 2015

Published online :

22nd November 2015

I. INTRODUCTION

In the field of gear transmissions there is a growing need for higher load carrying capacities and increased fatigue life. In order to achieve this, researchers focus either on the development of advanced materials and new methods of heat treatment or on the design of stronger tooth profiles and methods of gear manufacturing.In order to improve load carrying capacity of the gears Litvin F. L. et al. [1] and Tsai M. et al. [2] focused their research work to design the stronger tooth profiles. Hoffmann G. et al. [3] developed advanced material for high load gear applications. Townsend D. P et al. [4], Legge G. [5], and Herring D. H. [6], proposed improved methods on heat treatment. Spitas V. A et al. [7], and Alexander L. K et al. [8], redesigned novel gear root fillets to improve the strength of the gear.Alexander L. Kapelevich and Thomas M. McNamara [9] Direct Gear Design for Optimal Gear Performance.F.W. Brown, S.R. Davidson, D.B. Hanes, D.J. Weires and A. Kapelevich [10] optimize fillet.Majority of gear applications use the standard 20 involute teeth generated by rack, hob or CNC cutting process because of its good combination of bending and surface pressure strength, interchangeability, insensitivity to changes in the nominal center distance, commercial availability and easy manufacturing by conventional methods. On the other hand it has some disadvantages, one of which is that for a small number of teeth (practically less than 17) the standard involute presents the problem of undercutting. In undercutting the tooth fillet is generated as the tip of the cutter removes material from the involute profile, thus resulting in teeth that have a smaller thickness near their root, where the critical section is usually located.One of the primary cause of gear tooth failure is the presence of large root stresses reduce the overall gear life and can result in tooth failure under peak load. Maximum principle stress is the key factor which governs the fatigue life of the gear. A small amount of reduction in principle stresses leads to increase in the fatigue life considerable. Therefore it is important to reduce max principle stress for improve the gear life.In the present study a novel design of fillet for spur gear teeth is presented. The proposed new teeth are composed of a standard involute working profile from the outer to the form circle of the gear and of a circular fillet profile fromthe form of the root circle

of the gear replacing the conventional trochoidal fillet profile. These teeth are first modelled geometrically and thentheirbehaviour in bending is studied by assuming loading at their Highest Point of Single Tooth Contact (HPSTC). The maximum principle stresses are calculated on various numbers of teeth using FEA.

II. CIRCULAR FILLET GEOMETRY

The novel circular fillet tooth geometry is defined through the following procedure.Consider the involute spur gear tooth of circular fillet illustrated in Figure 1, where point 0 is the center of the gear, axis 0y is the axis of symmetry of the tooth and point B is the point Where the involute profile starts. Point A is the point of tangency of the circular fillet with the Root circle r_f. Point D lying on $\varepsilon_2 \equiv$OA represents the center of the circular fillet. Line ε_3 is tangent to the root circle at A and intersects with line ε_1 at C. The fillet is tangent to the line ε_1 at point E. Since it is always $r_s > r_f$ (Ref. 1), the proposed circular fillet can be implemented without exceptions on all spur gears regardless of the number of teeth or other manufacturing parameters.
A comparison of the geometrical shapes of a tooth with a circular fillet and of one with a standard fillet is presented in Figure 2

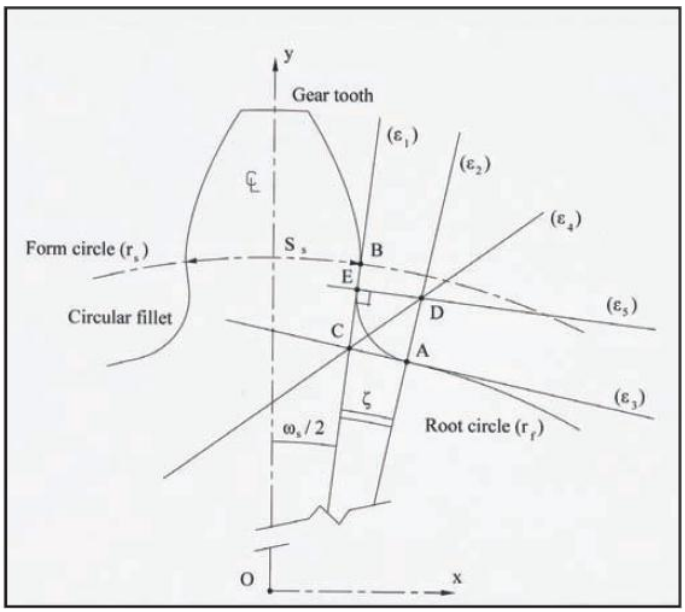

Fig.-1 circular fillet geometry

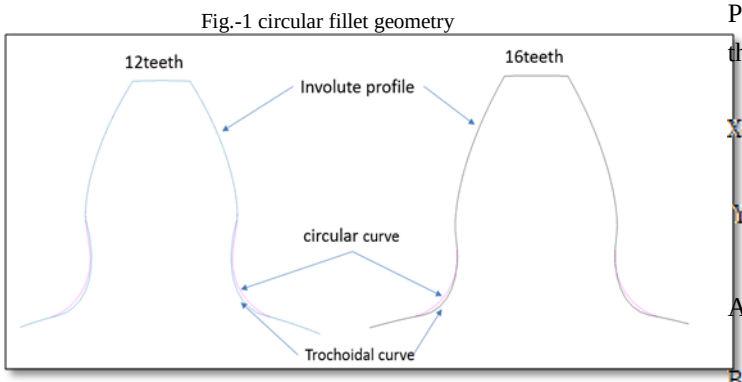

Fig-2 circular filler Vs trochoidal fillet

m is module of teeth & z is number of teeth then pitch radius (r_o) & tooth thickness calculated by

$$ro = \frac{mz}{2} \text{ and } S_{ov} = \pi m + 2x\tan\alpha_o \ldots\ldots\ldots\ldots (1)$$

$$S_s = r_s\left[\frac{S_{ov}}{ro} + 2(\varphi_o - \varphi_s)\right] \ldots\ldots\ldots\ldots \quad (2)$$

Where:
$\varphi_s = \tan\alpha_s - \alpha_s$ is the involute function on circle r_s and
$\alpha_s = \cos{-1}\left(\frac{r_g}{r_s}\right)$ Is the pressure angle on circle r_s.

α_o=nominal pressure angle and x=addendum modification

Angle $\omega_s/2$ that corresponds to the arc $S_s/2$ (Fig. 1) is given by the equation:

$$\frac{\omega_s}{2} = \frac{\frac{S_s}{2}}{r_s} = \Omega_s \quad \ldots\ldots\ldots\ldots \quad (3)$$

Angle ζ (Fig. 1) takes values between 0 and ζmax so that:

$$\zeta_{max} = \frac{\pi}{2} - \Omega_s \ldots\ldots\ldots\ldots\ldots\ldots\ldots\ldots (4)$$

The coordinates of points A and B are:

$$x_A = r_f \sin(\zeta + \Omega_s), y_A = r_f \cos(\zeta + \Omega_s) \ldots (5)$$

$$x_B = r_f \sin\Omega_s, y_B = r_f \cos\Omega_s \ldots\ldots\ldots\ldots\ldots\ldots (6)$$

The defining equations of lines (ε_1) and (ε_2) are respectively:

$$(\varepsilon_1): y = \frac{x}{\tan\Omega_s}, (\varepsilon_2): y = \frac{x}{\tan(\zeta + \Omega_s)} \ldots\ldots\ldots (7)$$

Since ε_3 is perpendicular to ε_2 and ε_3 passes through point A (x_A, y_A) its defining equation is:

$$y = -\tan(\zeta + \Omega_s)x + \frac{r_f}{\cos(\zeta + \Omega_s)} \ldots\ldots\ldots\ldots (8)$$

Point C (x_C, y_C) is the intersection of ε_1 and ε_3, and therefore its coordinates should verify Equation 7 and hence:

$$Xc = \frac{r_f \tan\Omega s}{(\sin(\zeta + \Omega_s)\tan\Omega_s + \cos(\zeta + \Omega_s))},$$

$$Yc = \frac{Xc}{\tan\Omega_s} \quad (9)$$

Angle BCA is calculated as:

$$BCA = \left(\frac{\pi}{2} - \Omega_s\right) + \zeta + \Omega_s = \frac{\pi}{2} + \zeta \ldots\ldots\ldots\ldots (10)$$

Line ε4 bisects the previous angle BCA, so its inclination is:

$$\tan\left[\frac{BCA}{2} - (\zeta + \Omega_s)\right] = \tan\left(\frac{\pi}{4} - \frac{\zeta}{2} - \Omega_s\right) \ldots\ldots\ldots (11)$$

Point C (x_C, y_C) belongs to ε_4 and thus the defining equation of line ε_4 is derived as:

$$y = \tan\left(\frac{\pi}{4} - \frac{\zeta}{2} - \Omega_s\right)x + rf\,\frac{1 - \tan\Omega_s \tan\left(\frac{\pi}{4} - \frac{\zeta}{2} - \Omega_s\right)}{\sin(\zeta + \Omega_s)\tan\Omega_s + \cos(\zeta + \Omega_s)} \ldots (12)$$

At this point, two distinct cases are considered. Point E coincides with point B (E ≡ B). In this case, ε_5 is perpendicular to ε_1 at point E ≡ B, so ε_5 must have an inclination equal to $-\tan\Omega_s$,and since point B belongs to ε_5, its defining equation is:

$$y = -\tan\Omega_s x + \frac{r_s}{\cos\Omega_s} \ldots\ldots\ldots\ldots (13)$$

Point D(x_D, y_D) should verify both Equations 7 and 13 and therefore has the following coordinates:

$$x_D = r_s \frac{\tan(\zeta + \Omega_s)}{\cos\Omega_s + \sin\Omega_s \tan(\zeta + \Omega_s)},$$

$$y_D = r_s \frac{1}{\cos\Omega_s + \sin\Omega_s \tan(\zeta + \Omega_s)} \ldots\ldots\ldots (14)$$

According to Figure 1, it is AC = BC, and after substitutions and calculations, we arrive at the equation:

$$\frac{r_f^2 + r_s^2}{2} = \frac{r_s\, r_f}{\cos\zeta}(\sin^2\Omega_s + \cos^2\Omega_s) \ldots\ldots\ldots (15)$$

From which the value of ζ is derived as:

$$\zeta = \cos^{-1}\frac{2\, r_s\, r_f}{r_f^2 + r_s^2} \ldots\ldots\ldots\ldots (16)$$

By defining the non-dimensional parameter $S = r_s / r_f > 1$, Equation 17 becomes:

$$\zeta = \cos^{-1}\frac{2\,S}{1 + S^2} \ldots\ldots\ldots\ldots (17)$$

Equation 17 is used for the determination of angle (ζ). Point E lies below point B. In this case, it is $\zeta \le \zeta_{max}$, and the center of the circular fillet of the tooth is calculated following the methodology described below:

$$CA = \sqrt{(x_A - x_C)^2 + (y_A - y_C)^2} = CE \ldots\ldots\ldots\ldots (18)$$

$$AD = CA \tan\left(\frac{\pi}{4} + \frac{\zeta}{2}\right) \ldots\ldots\ldots (19)$$

The coordinates of points D (x_D, y_D) and E (x_E, y_E) are, respectively:

$$x_D = (rf + AD)\sin(\zeta + \Omega_s),$$
$$yD = (rf + AD)\cos(\zeta + \Omega_s) \ldots\ldots\ldots (20)$$

$$x_E = (OC + CE)\sin\Omega_s,$$
$$yE = (OC + CE)\cos\Omega_s, \ldots\ldots\ldots\ldots (21)$$

The remaining portion of the tooth profile between points B and E is a straight line.

III. PART MODELING

The circular root fillet is preferable for gears with small number of teeth. Table 1 gives parameters of 12 teeth & 16 teeth spure gear. CAD model create in pro-e by using following Procedure.

Gear tooth type :	*Standard involute full depth*
Number of teeth (Z)	*12 and 16*
Normal module (mn) :	*8*
Pressure angle (α) :	*20°*
Helix angle (β) :	*0°*
Addendum modification:	*0*
Tooth root fillet :	*Trochoidal and Circular (proposed)*

Table 1. Specification of gear

To plot the involute curve:

To plot the curve in the Cre-O by using .ibl file. In .ibl file contains X, Y and Z co-ordinates of curve. To generate .ibl file need to do below procedure:

• Copy the co-ordinates from the excel file and paste in the notepad file.

• At the start of the notepad file write below programming codes to convert text file
to .ibl file

```
OPEN
ARCLENGTH
BEGIN SECTION! 1
BEGIN CURVE
```

After generation of .ibl file next step is to call .ibl file in the pro-e. Involute curve is generated in pro-e. With help of this sketch generate the 3D Model (see fig.3 & 4)

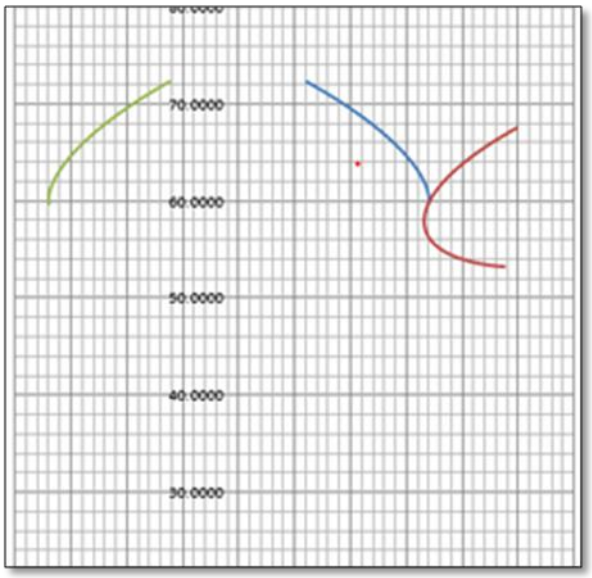

Fig. 3 curve generated in excel file

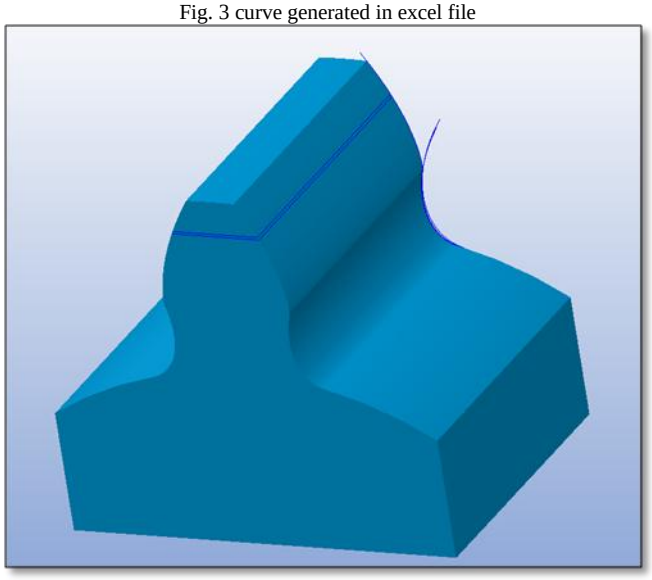

Fig.4 3 –D cad data in Cre-o

IV. FORCE ANALYSIS

Maximum normal load (Fn) are coming on HPSTC point of gear tooth. This force (Fn) is at an angle with the common Tangent to pitch circle (i.e., pressure angle) is resolved into two components:

1) Tangential Force (Ft) = Fn.cosα
2) RadialForce (Fr) = Fn.sinα

The tangential force 'Ft' or transmitting load can be derived from the following standard equation;

Ft = [2000T]/Pitch circle diameter

Where, T = 9550 P/n

Tangential Force is considered for bending stress calculation. Here we are considering 1000N tangential load at HPSTC point on both 12 teeth & 16 teeth gear.

Two kinds of stresses are induced in gear pair during the power transmission from one shaft to another shaft. They are: 1) Bending stress – Induced on gear teeth due to tangential force developed by the power and 2) Surface contact stress or Compressive stress. The load is assumed to be uniformly distributed along the face width of the tooth.

V. STRESS ANALYSIS

A finite element model with a single tooth is considered For analysis ABAQUS software is used. In this work, heat treated alloy steel is taken for analysis. The Gear tooth is meshed in 3-dimensional (3-D) has a Quadratic displacement behaviour. Figure 5shows the FEM meshed model of single tooth Trochoidal fillet roots.

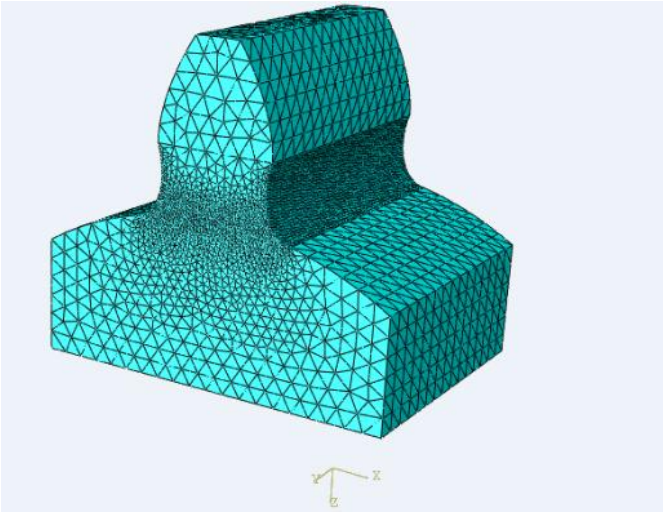

Fig 512 teeth Trochoidal Fillet mesh model

VI. RESULT AND DISCUSSION

The deflection and Max principle stress analysis were carried out for the spur gear with 12 teeth and 16 teeth. The induced Max principle stress and obtained deflection values are presented in Table 2.The investigation reveals that the deflection value of both circular and trochoidal root fillet gears are identical. But, looking in to max principle stress the 12 T gear generated with circular root fillet have lesser stress (71.91Mpa)when compared with trochoidal fillet gear (95.62 Mpa).

Correspondingly, the induced max principle stress for 16 T Circular root fillet gear was 81.98 Mpa where as it was noticed as 89.09 Mpa for 16 T trochoidal root fillet gear. The bending stress and deflection values taken from FEA results for 12 teeth gear with circular and trochoidal root fillet are depicted in Figure 6,7,8,9.Similarly, the bending stress and deflection values taken from FEA results for 16 teeth gear with circular and trochoidal root fillet are depicted in Figure 10,11,12,13.

Load=1000N			
Deflection(mm)			
12 Teeth		*16 Teeth*	
Circular	*Trochoidal*	*Circular*	*Trochoidal*
3.2e-3	*3.3e-3*	*2.28e-3*	*2.42e-3*
max principle stress			
12 Teeth		*16 Teeth*	
Circular	*Trochoidal*	*Circular*	*Trochoidal*
71.91	*95.62*	*81.98*	*89.09*

Table 2.

Max principle stresses (Mpa) on 12 Teeth

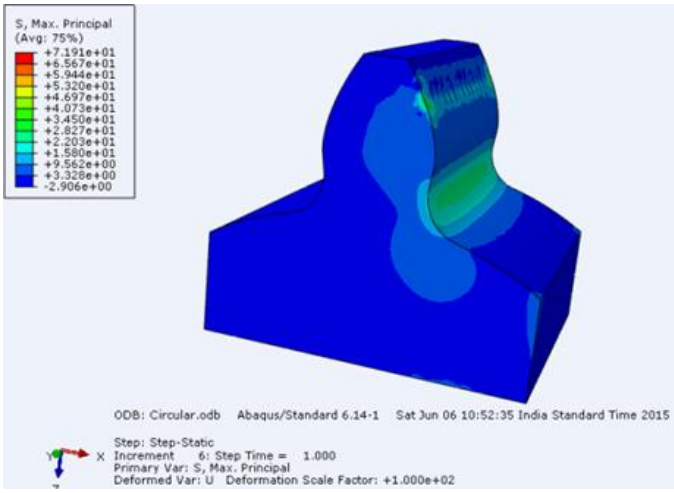

Fig 6 Circular Fillet

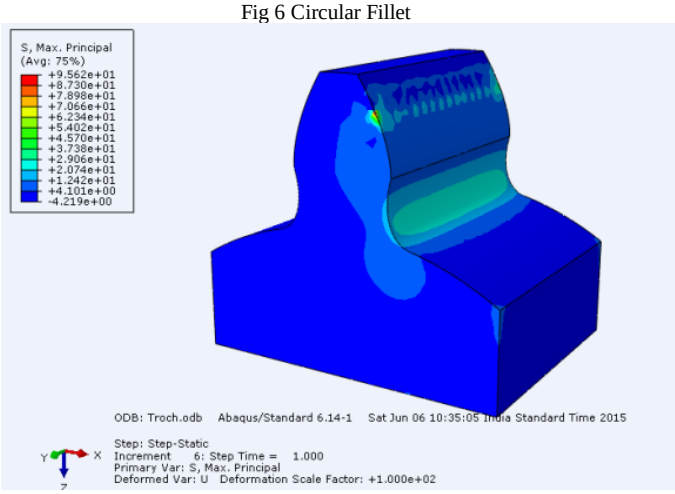

Fig 7 Trochoidal Fillet

Deflection (mm) on 12 Teeth

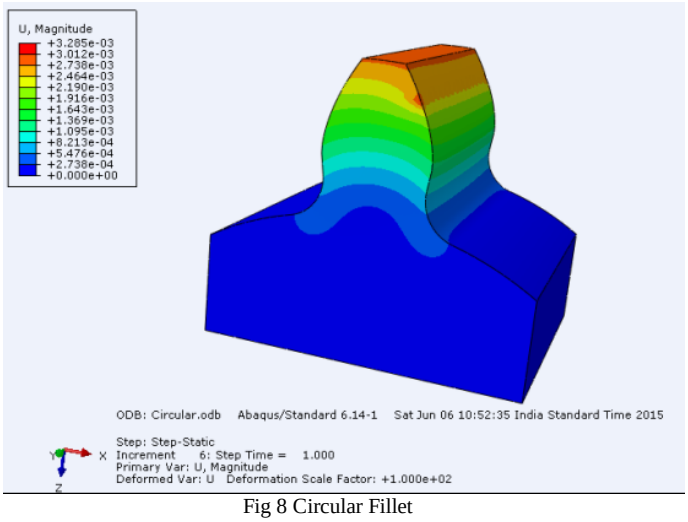

Fig 8 Circular Fillet

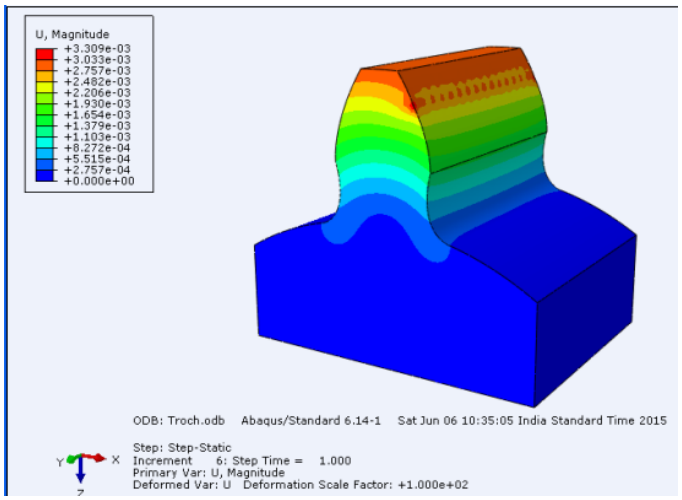

Fig 9 Trochoidal Fillet

Max principle stresses (Mpa) on 16 Teeth

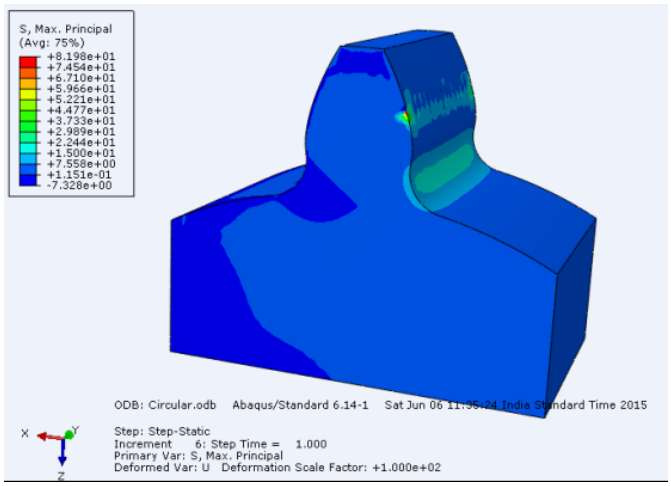

Fig. 10 Circular Fillet

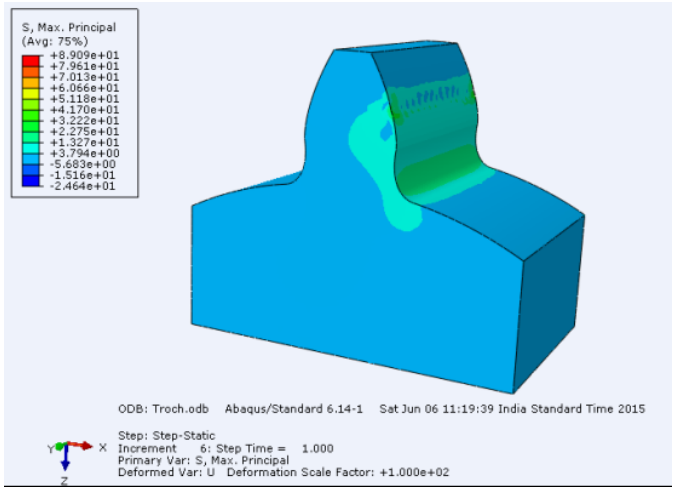

Fig. 11 Trochoidal Fillet

Deflection (mm) on 16Teeth

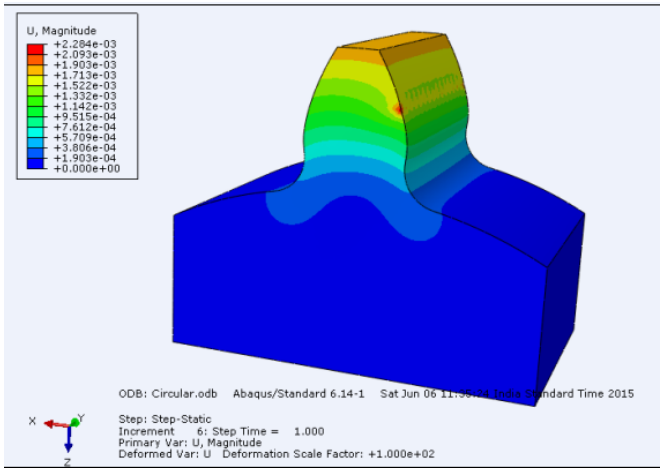

Fig. 12 Circular Fillet

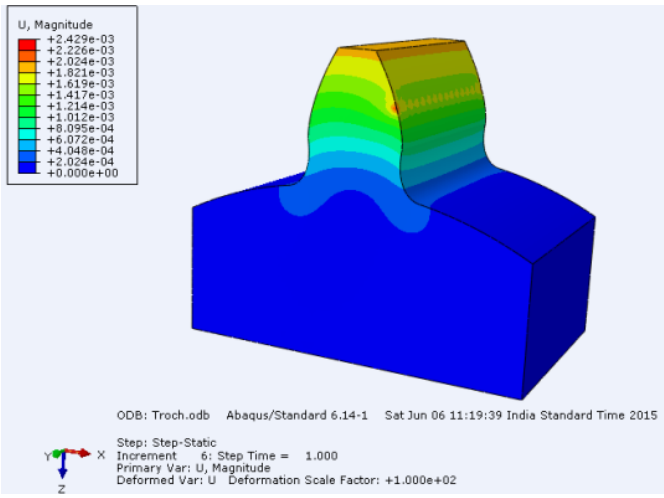

Fig.13 Trochoidal Fillet

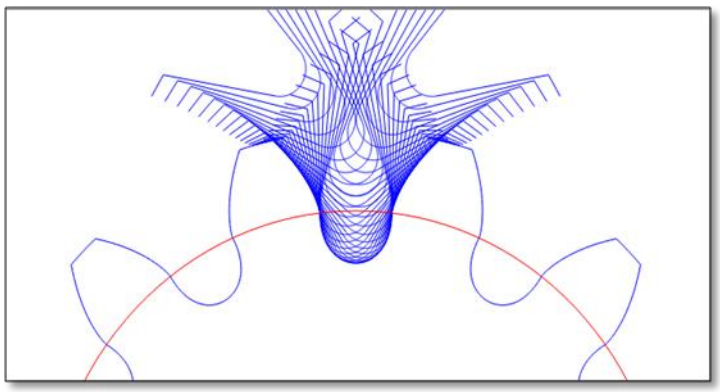

Figure 14—Schematic of the hobbing process for the production of a circularfillet.

VII. CONCLUSIONS

The investigation result infers that the deflection in circular root fillet is almost same comparing to the trochoidal root fillet gear tooth. However, there is appreciable reduction in Max principle stress value for circular root fillet design in comparison to that of Max principle stress value in trochoidal root fillet design. From the foregoing analysis it is also found that the circular fillet design is more opt for lesser number of teeth in pinion and trochoidal fillet design is more suitable for higher number of teeth in gear (more than 17 teeth). In addition to that the FEA results indicates that the gears with circular root fillet design will result in better strength, reduced Max principle stress and also improve the fatigue life of gear material.

VIII.REFERENCES

[1] Litwin, F.L., L. Qiming and A.L. Kapelvich, Asymmetric Modified Spur Gear Drives: Reduction of Noise, Localization of Contact, Simulation of Meshing and Stress Analysis. Computer Methods in App. Mechanics and Eng.,188:363-390, 2000.

[2] Tsai, M. and Y. Tsai, Design of High Contact Ratio Spur Gears Using Quadratic Parametric Tooth profiles.Mechanism and Machine Theory, 33:551-542. 1998.

[3] Hoffman, G et al., Testing P/M Materials for High Loading Gear Application. Intl. J. Powder Metallaurgy, 35:35-44.,1999.

[4] Townsed, D.P. and E.N. Bambeger, Surface Fatigue Life of Carburized and Hardened M50NiL and AISI 9310 Spur Gears and Rolling Contact Test Bars. J. Propulsion and Power, Vol: 7, 1991.

[5] Legge, G., Plasma Carburizing-Facility Design and Operating Data, Industrial Heating, pp: 26-30, 1988.

[6] Herring, D.H., Why Vacuum Carburizing Is Effective for Today and Tomorrow: II,Industrial Heating, pp 22-26, 1987.

[7] V. Spitas, Th. Castopoulos and C. Spitas, Increasing the Strength of Standard Involute Gear Teeth with Novel Circular Root Fillet Design, American Journal of Applied Sciences 2 (6): 1058-1064, 2005

[8] Alexander L. Kapelevich- Thermotech Company and Yuriy V. Shekhtman, Direct Gear Design: Bending Stress Minimization; Gear technology, Sep-Oct 2003,pp 44-47,

[9] Alexander L. Kapelevich and Thomas M. McNamara "Direct Gear Design for Optimal Gear Performance" SME's Gear Processing and Manufacturing Clinic, October 6, 2003 held in conjunction with AGMA's GEAR EXPO '03 in Columbus, OH.

[10] F.W. Brown, S.R. Davidson, D.B. Hanes, D.J. Weires and A. Kapelevich[10] optimize fillet.2011

[11] M.S. Hebbal, V.B. Math, C.M. Veerendrakumar, S.B.Kerur, "A Study on Reducing the Root Fillet Stress in Spur Gear Using Internal Stress Relieving Feature of Different Shapes", International Journal of Recent Trends in Engineering, Vol. 1, No. 5, May 2009.

